Section

B

Audible Warning Devices

WESTERN RAILROAD SUPPLY COMPANY

DIVISION OF WESTERN INDUSTRIES, INC.

MANUFACTURERS AND DISTRIBUTORS

General Offices and Factory

2428 So. Ashland Avenue

CHICAGO 8, ILLINOIS

District Offices

New York 7	Philadelphia 2	St. Louis 1	Kansas City 5
Louisville 2	St. Paul 1	Houston 23	San Francisco 5

Printed in U.S.A.

Issue of 1957

Typical Installations of WRRSCO Bells

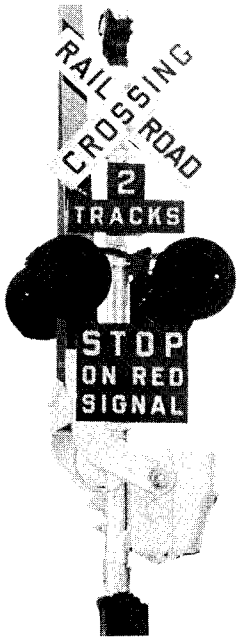

Type 222 Bell Used With Model 10 Signal

Type 990 Locomotive Type Bell Used With Model 10 Signal

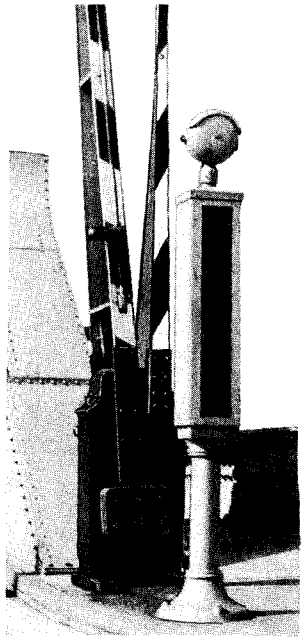

Type 222 Bell Used With Type N-N Drawbridge Gate

Highway Crossing Bell
Type 222
For Top of Post Mounting

6 to 600 Volts D.C.

(Specify Operating Voltage)

Approximately 200 Strokes Per Minute

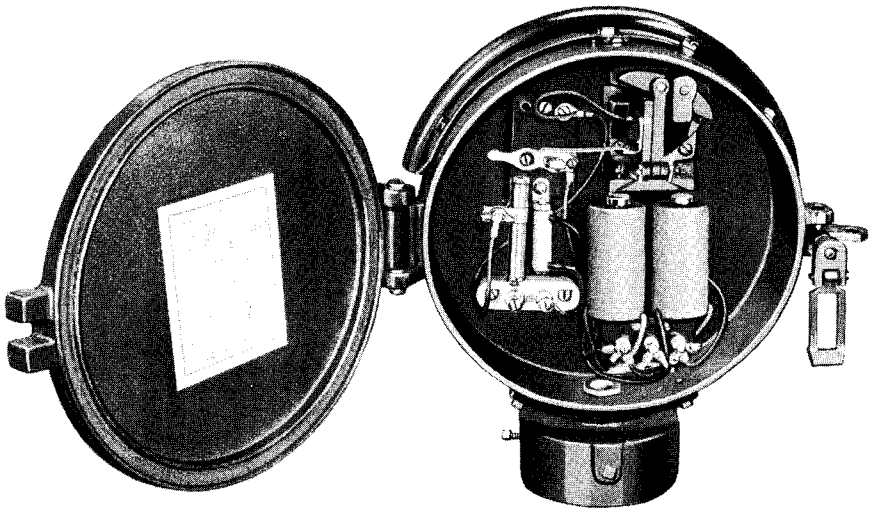

Types 0222BR, CR, DR and FR Highway Crossing Bells are equipped with a variable resistance for 6 to 16 volts D.C. operation.

Types 0222B, C, D and F Highway Crossing Bells are equipped with a fixed resistance for 16 to 600 volts D.C. as specified.

The movement in detail consists of a pair of magnets, an armature, an oscillator and hammer, a link connecting the armature and oscillator, and an adjustable circuit breaker. The movable contact is mounted on the connecting link. There is only one adjustment to be maintained and that is a 1/16″ opening on the circuit breaker. This adjustment is readily made by means of a set screw mounted on the contact finger support. No springs are used to start or control the operation of the bell because the weight of the hammer, due to gravity, returns all moving parts to their normal positions. The bell may be mounted on top or side of 3″, 3½″, 4″ or 5″ I.D. pipe post. By use of our Gooseneck Bracket (see Plate B60) the bell may be mounted against a wall or building.

Steel gong is furnished unless bell metal is specified.

For ordering references see following pages.

WESTERN RAILROAD SUPPLY COMPANY

Highway Crossing Bell
Type 222
For Top of Pipe Mounting

6 to 16 Volts D.C.
12" Gong

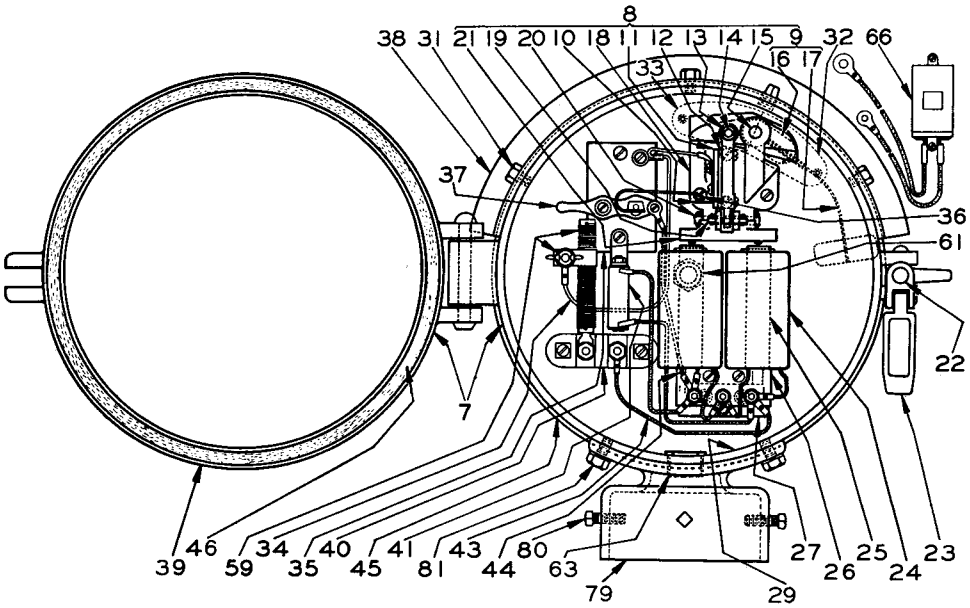

2L, 3L, 4L, 4AL

ORDERING REFERENCE

Specify Plate Number B5, Reference Number and Description

Ref. No.	Description	Piece No.
2L	Type 222 Bell for Mounting on 3½" I. D. Pipe	0222 BR
3L	Type 222 Bell for Mounting on 4" I. D. Pipe	0222 CR
4L	Type 222 Bell for Mounting on 3" I. D. Pipe	0222 DR
4AL	Type 222 Bell for Mounting on 5" I. D. Pipe	0222 FR

SPECIFY THE FOLLOWING—

(a) Loud or Soft Tone Hammer. (Loud Tone Hammer Will Be Furnished Unless Otherwise Specified.)

FOR DETAILS SEE PAGES 9 AND 10.

WESTERN RAILROAD SUPPLY COMPANY

Highway Crossing Bell
Type 222
For Top of Pipe Mounting

16 to 600 Volts D.C.
12″ Gong

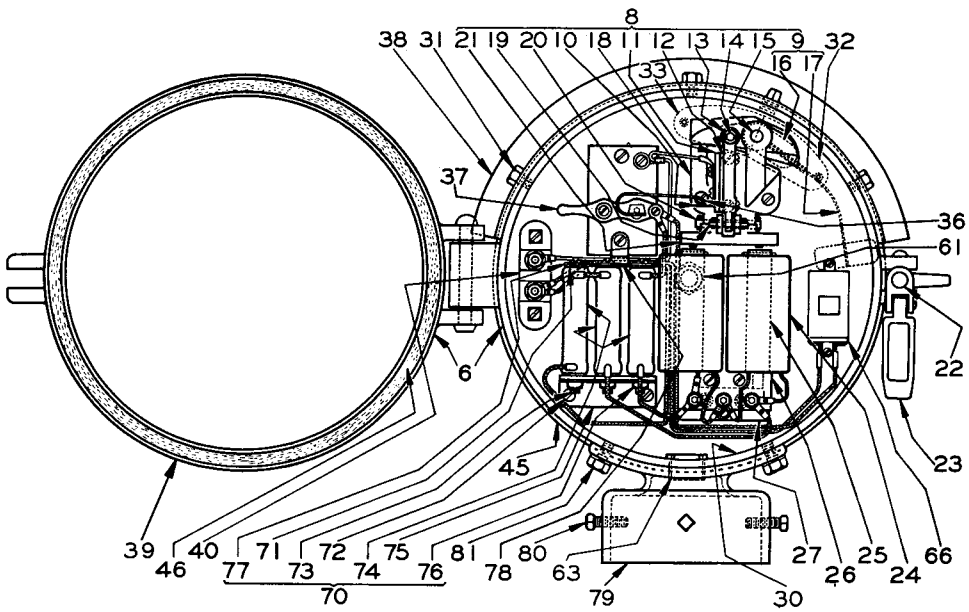

2H, 3H, 4H, 4AH

ORDERING REFERENCE Specify Plate B5, Reference Number and Description		
Ref. No.	Description	Piece No.
2H	Type 222 Bell for Mounting on 3½″ I. D. Pipe	0222 B
3H	Type 222 Bell for Mounting on 4″ I. D. Pipe	0222 C
4H	Type 222 Bell for Mounting on 3″ I. D. Pipe	0222 D
4HA	Type 222 Bell for Mounting on 5″ I. D. Pipe	0222 F

SPECIFY THE FOLLOWING—

(a) Operating Voltage.

(b) Loud or Soft Tone Hammer. (Loud Tone Hammer Will Be Furnished Unless Otherwise Specified.)

FOR DETAILS SEE PAGES 9 AND 10.

Highway Crossing Bell
Type 222
For Side of Post or Wall Mounting

6 to 600 Volts D.C.
(Specify Operating Voltage)
Approximately 200 Strokes Per Minute

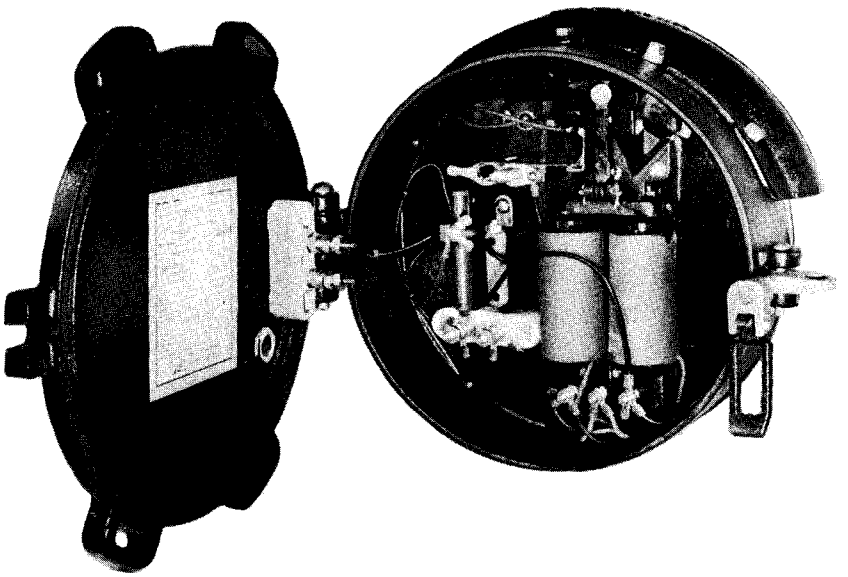

Type 0222AR Highway Crossing Bell is equipped with a variable resistance for 6 to 16 Volts D.C. operation.

Type 0222A Highway Crossing Bell is equipped with a fixed resistance for 16 to 600 Volts D.C. operation as specified.

The construction and operation of types 0222AR and 0222A Highway Crossing Bells is the same as those illustrated on page 3 except they are for side of pipe post mounting.

For ordering references see following pages.

Highway Crossing Bell
Type 222
For Side of Pipe or Wall Mounting

6 to 16 Volts D.C.
12″ Gong

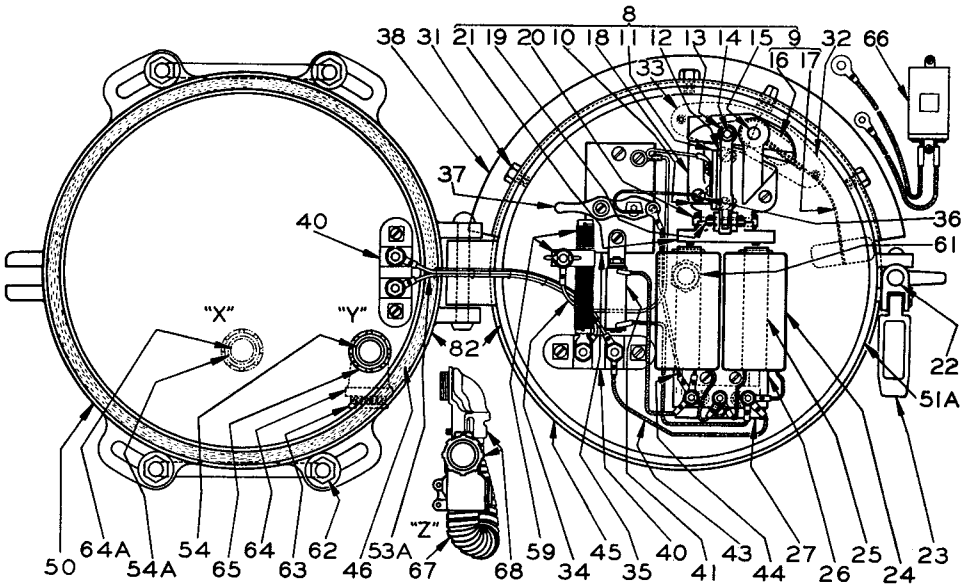

IL, ILA, ILB

ORDERING REFERENCE

Specify Plate Number B5, Reference Number and Description

Ref. No.	Description	Piece No.
1L	Type 222 Bell for Mounting on Side of Pipe (Direct Wire Entrance into Pipe Per View "X")	0222 A1R
1LA	Type 222 Bell for Mounting on Side of Pipe (Outside Wire Entrance Per View "Y")	0222 AR
1LB	Type 222 Bell for Mounting on Side of Pipe (Flexible Connection to Pipe Per View "Z")	0222 ARP

SPECIFY THE FOLLOWING—

(a) Size of Pipe.

(b) Loud or Soft Tone Hammer. (Loud Tone Hammer Will Be Furnished Unless Otherwise Specified.)

FOR DETAILS SEE PAGES 9 AND 10.

Highway Crossing Bell
Type 222
For Side of Pipe or Wall Mounting

16 to 600 Volts D.C.
12" Gong

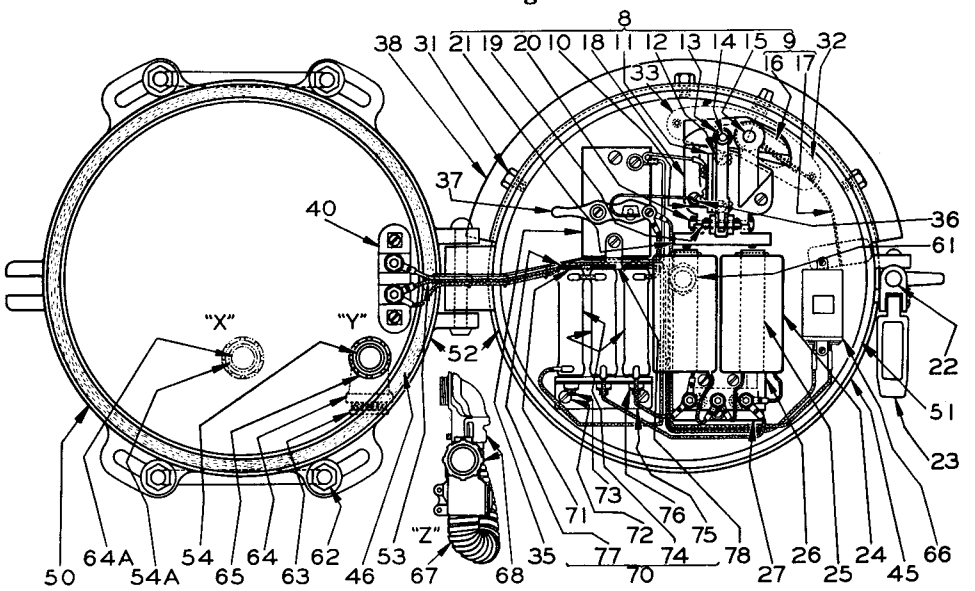

IH, IHA, IHB

ORDERING REFERENCE Specify Plate Number B5, Reference Number and Description		
Ref. No.	Description	Piece No.
1H	Type 222 Bell for Mounting on Side of Pipe (Direct Wire Entrance to Pipe Per View "X")	0222 A1
1HA	Type 222 Bell for Mounting on Side of Pipe (Outside Wire Entrance Per View "Y")	0222 A
1HB	Type 222 Bell for Mounting on Side of Pipe (Flexible Connection Per View "Z")	0222 AP

SPECIFY THE FOLLOWING—

(a) Operating Voltage.

(b) Size of Pipe.

(c) Loud or Soft Tone Hammer. (Loud Tone Hammer Will Be Furnished Unless Otherwise Specified.)

FOR DETAILS SEE PAGES 9 AND 10.

WESTERN RAILROAD SUPPLY COMPANY

Highway Crossing Bell
Type 222

REPLACEMENT PARTS

ORDERING REFERENCE

Specify Plate Number B5, Reference Number and Description

Ref. No.	Description	Piece No.
6	Case and Cover Subassembly for Type 222 B, C, D, or F Bell	1249-20A
7	Case and Cover Subassembly for Type 222 BR, CR, DR or FR Bell	1249-20
8	Movement Base Assembly Complete (Includes Items 9 thru 21)	1215
9	Oscillator and Hammer Assembly (Includes Items 16 and 17)	1215-1
10	Moving Contact (with Silver Contact)	1210-5
10a	Moving Contact (with Platinum Contact)	1210-5B
11	Link Insulator	1210-4
12	Insulation Strip	1210-10
13	Operating Link	1209-4
14	Operating Link Stud	1209-6
15	Oscillator Stud	1209-8
16	Oscillator with Bushing and Stud (Includes Item 14)	1209-13
17	Hammer Complete with Reenforcement Springs (For Loud Tone)	1210-17
17a	Hammer Complete with Reenforcement Springs (Bakelite Faced for Soft Tone)	1210-20
18	Movement Base Only	1209-1
19	Operating Link Pin Complete with Cotter Pins	1209-9
20	Armature Pin Complete with Cotter Pins	1209-10
21	Armature	1209-2
22	Locking Bolt	1410-11
23	Locking Hasp and Bolt	1410-31
24	Magnet Coil (Specify Resistance of Bell)	1231-3
25	Magnet Core	1209-7
26	Terminal Block Complete	1249-7
27	Magnet Bracket	1209-3
28	Case Subassembly for Type 1203 Bell	1203-12A
29	Case Subassembly for Type BR, CR, DR and FR Bell	1206A-10
30	Case Subassembly for Type B, C, D and F Bell	1206C-10
31	Cap Screw, 5/16"—18 x 5/8" Lg., Iron, Hex. Hd.	
32	Right Hand Dust Guard	1248-1
32a	Right Hand Dust Guard (Fish Type)	1248-3
33	Left Hand Dust Guard	1248-2
34	Flexible Lead Wire (Included in Item 59)	1222-11
35	Contact Block	1210-3
36	Contact Finger (With Silver Contacts)	1222-10
36a	Contact Finger (With Platinum Contacts)	1222-10B
37	Contact Finger Support	1209-14
38	Rain Shield	1208
39	Cover for Type 222 B, C, D and F Bell (Includes Packing)	1217-1
40	Porcelain Terminal Block	1056-16
41	Non-arcing Resistance Complete	1235
43	Flexible Wire Lead	1222-14

WESTERN RAILROAD SUPPLY COMPANY

Highway Crossing Bell
Type 222

REPLACEMENT PARTS
(Continued)

ORDERING REFERENCE
Specify Plate Number B5, Reference Number and Description

Ref. No.	Description	Piece No.
44	Flexible Wire Lead	1222-13
45	Steel Gong	1211
45a	Bell metal gong	1211-B
46	Cover Packing Strip	1217-2
50	Cover for Type 222A and 222AR Bell (Outside Wire Entrance)	1207-5
50a	Cover for Type 222A1 and 222A1R Bell (Wire Entrance Into Pipe)	1218-1
50b	Cover for Type 222AP and 222ARP Bell (Flexible Conduit Entrance)	1207A-5
51	Case for Type 222 A, A1 and AP Bells	1206B-10
51a	Case for Type 222 AR, A1R and ARP Bells	1206-10
52	Case and Cover Subassembly for Type 222A Bell	1249-5B
52a	Case and Cover Subassembly for Type 222 A1 Bell	1249-4B
52b	Case and Cover Subassembly for Type 222 AP Bell	1249-4A
53	Flexible Wire Lead	1222-18
54	Elbow Wire Outlet for Type 222A Bell (Outside Wire Entrance) (Includes Items 63, 64 and 65)	1222-15
54a	Straight Wire Outlet for Type 222A Bell (Wire Entrance Into Pipe) (Includes Items 64A and 65)	1222-16
59	Variable Resistance Unit	1210-28
61	Cap Screw, ½"—13 x ⅞" Lg. Steel, Hex. Hd. and Steel Lock Washer	
62	"U" Bolt for 4" I. D. Pipe	1207-1
62a	"U" Bolt for 5" I. D. Pipe	1207-2
62b	"U" Bolt for 3½" I. D. Pipe	1207-3
62c	"U" Bolt for 3" I. D. Pipe	1207-4
62d	"U" Bolt for 6" Pipe	1207-8
62e	Hinged "U" Bolt for 8" Pipe	3364-33
63	¾" Chase Nipple	
64	¾" Street El	
64a	¾" Pipe Nipple	
65	¾" Conduit Bushing	
66	Non-arcing Condenser	1101-87A
67	¾" Penflex Conduit, 18" Lg.	
68	¾" 90° Squeeze Connector	
70	Subassembly of Shunt Resistance for 250 Volts, D. C.	1237-25
70a	Subassembly of Shunt Resistance for 600 Volts, D. C.	1237-25B
70b	Subassembly of Shunt Resistance for 300 Volts, D. C.	1237-25C
71	Washer	1115
72	Mach. Screw, No. ¼"—20 x ¼" Lg., Rd. Hd. Brass	
73	Stove Bolt, No. ¼"—20 x 4" Lg., Rd. Hd. Steel	
74	Resistance Unit, 350 Ohms	1222-17
74a	Resistance Unit, 700 Ohms	1222-17B
74b	Resistance Unit, 400 Ohms	1222-17C
75	Mounting Bracket	1290-2
76	Square Steel Nut, ¼"—20	
77	Plain Brass Washer, ¾" O. D. x 9/32" I. D. x 1/16" Thick	
78	Wire Clip	1012-13
79	Socket for 3" I. D. Pipe (Includes Items 80 and 81)	1206-3B
79a	Socket for 3½" I. D. Pipe (Includes Items 80 and 81)	1206-2B
79b	Socket for 4" I. D. Pipe (Includes Items 80 and 81)	1206-4B
79c	Socket for 5" I. D. Pipe (Includes Items 80 and 81)	1206-5B
80	Set Screw, 5/16"—18 x ¾" Lg. Cup Pt., Iron	
81	Cap Screw, 5/16"—18 x ⅝" Lg. Hex. Hd., Iron and Lockwasher	
82	Case and Cover Subassembly for Type 222 AR Bell	1249-4
82a	Case and Cover Subassembly for Type 222 A1R Bell	1249-5
82b	Case and Cover Subassembly for Type 222 ARP Bell	1249-5A
83	Wire Cable (For 1203 Bells Only)	1203-24

Highway Crossing Bell
Type 1203
For A. C. Operation
or Normal Low Voltage A. C. with D. C. Reserve

Approximately 200 Strokes Per Minute

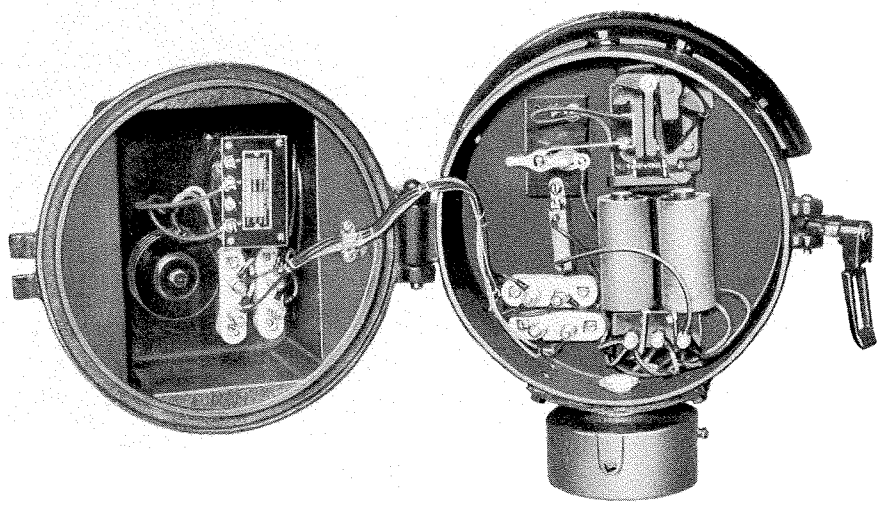

Type 1203 Highway Crossing Bell with rectifier and transformer built into cover is the well known Type 222 Bell modified to permit operation from any source. This bell can be furnished without the transformer, but with the rectifier, so that it may be normally operated from low voltage A.C. with D.C. reserve of the same voltage as used to operate flashing lights and other highway crossing signals.

Steel gong is furnished unless bell metal is specified.

For Ordering References, see Pages 12 and 13.

WESTERN RAILROAD SUPPLY COMPANY

Highway Crossing Bell Type 1203 For Normal Low Voltage A. C. with D. C. Reserve

12″ Gong

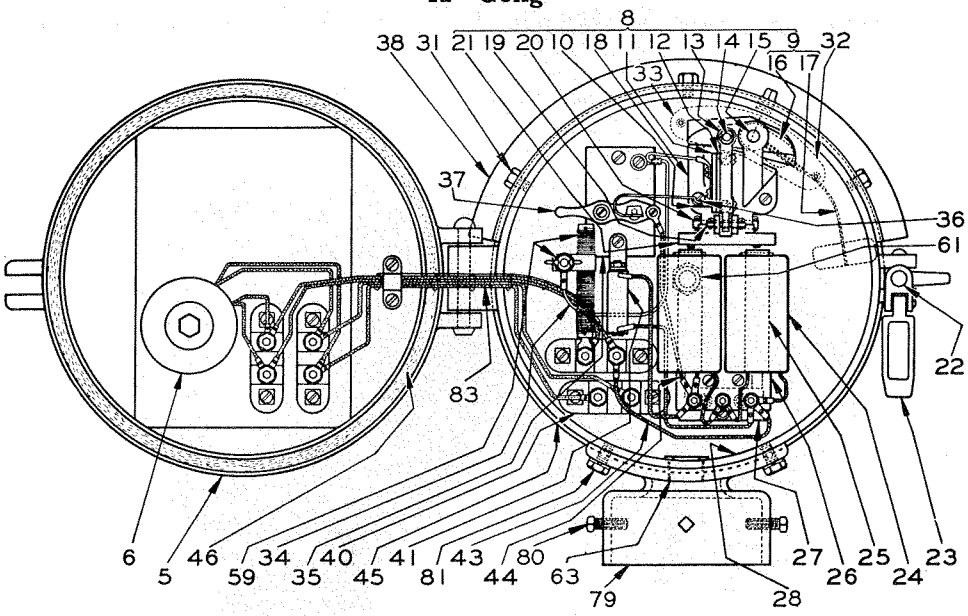

1, 2, 3, 4

ORDERING REFERENCE

Specify Plate Number B10, Reference Number and Description

Ref. No.	Description	Piece No.
1	Type 1203 Bell for Mounting on Top of 3″ I. D. Pipe	1203DR
2	Type 1203 Bell for Mounting on Top of 4″ I. D. Pipe	1203CR
3	Type 1203 Bell for Mounting on Top of 3½″ I. D. Pipe	1203BR
4	Type 1203 Bell for Mounting on Top of 5″ I. D. Pipe	1203FR
5	Cover Only (Not Drilled)	1203–9
6	Rectifier Only (Specify Operating Voltage and Frequency)	1203–10

SPECIFY THE FOLLOWING—

(a) Operating Voltage and Frequency.

(b) Loud or Soft Tone Hammer. (Loud Tone Hammer Will Be Furnished Unless Otherwise Specified.)

Type 1203 Highway Crossing Bell Can Be Mounted on the Side of a Pole or Flat Surface by Use of Our Gooseneck Bracket. See Plate B60.

FOR REPLACEMENT PARTS NOT LISTED ABOVE SEE PAGES 9 AND 10.

WESTERN RAILROAD SUPPLY COMPANY

Highway Crossing Bell

Type 1203

For A. C. Operation

12″ Gong

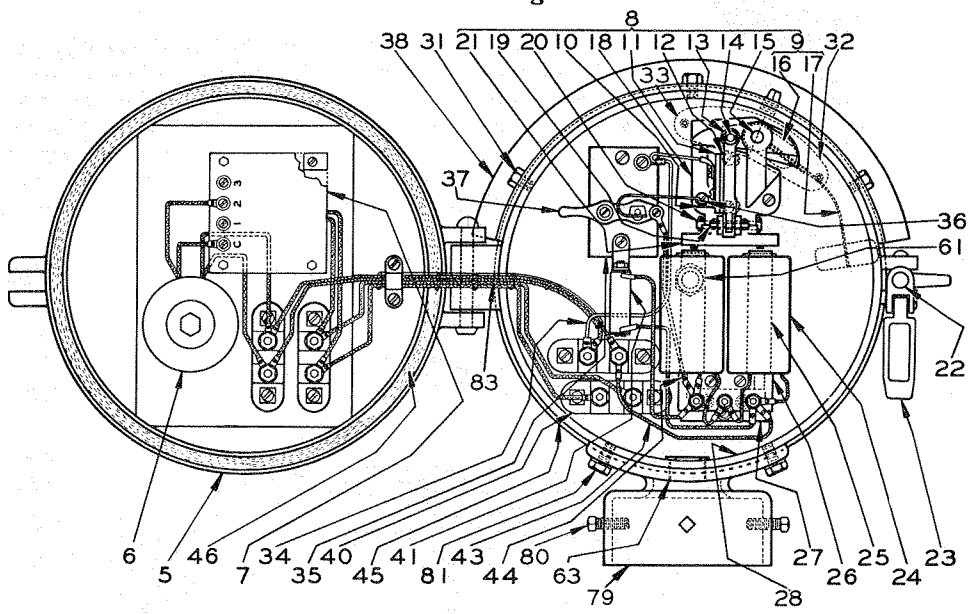

1A, 2A, 3A, 4A

ORDERING REFERENCE

Specify Plate Number B10, Reference Number and Description

Ref. No.	Description	Piece No.
1A	Type 1203 Bell for Mounting on Top of 3″ I. D. Pipe	1203D
2A	Type 1203 Bell for Mounting on Top of 4″ I. D. Pipe	1203C
3A	Type 1203 Bell for Mounting on Top of 3½″ I. D. Pipe	1203B
4A	Type 1203 Bell for Mounting on Top of 5″ I. D. Pipe	1203F
5	Cover Only (Not Drilled)	1203-9
6	Rectifier Only (Specify Operating Voltage and Frequency)	1203-10
7	Transformer Only (Specify Operating Voltage and Frequency)	1203-11

SPECIFY THE FOLLOWING—

(a) Operating Voltage and Frequency (115 or 230 volts, 25 or 60 cycles).

(b) Loud or Soft Tone Hammer. (Loud Tone Hammer Will Be Furnished Unless Otherwise Specified.)

Type 1203 Highway Crossing Bell Can Be Mounted on the Side of a Pole or Flat Surface by Use of Our Gooseneck Bracket. See Plate B60.

FOR REPLACEMENT PARTS NOT LISTED ABOVE SEE PAGES 9 AND 10.

WESTERN RAILROAD SUPPLY COMPANY

Type 1275 Pedestrian Crossing Bell

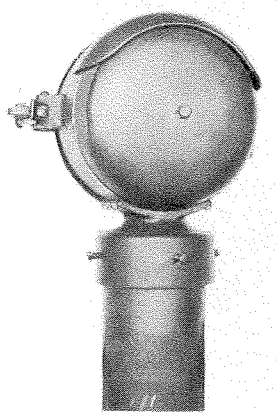

8" GONG TYPE

For 6 to 16 Volts D.C.

Approximately 225 Strokes Per Minute

Type 1275 Pedestrian Crossing Bell was especially designed for use in residential areas where too loud a warning might prove offensive. It is identical with the well-known Type 222 Bell except that it is built with an 8" gong and proportionally smaller parts. The Type 1275 bell is equipped with a variable resistance for 6 to 16 volts D.C. operation. Specify for mounting on top or sides of 3", 3½", 4", or 5" I.D. pipe post.

Steel gong is furnished unless bell metal is specified.

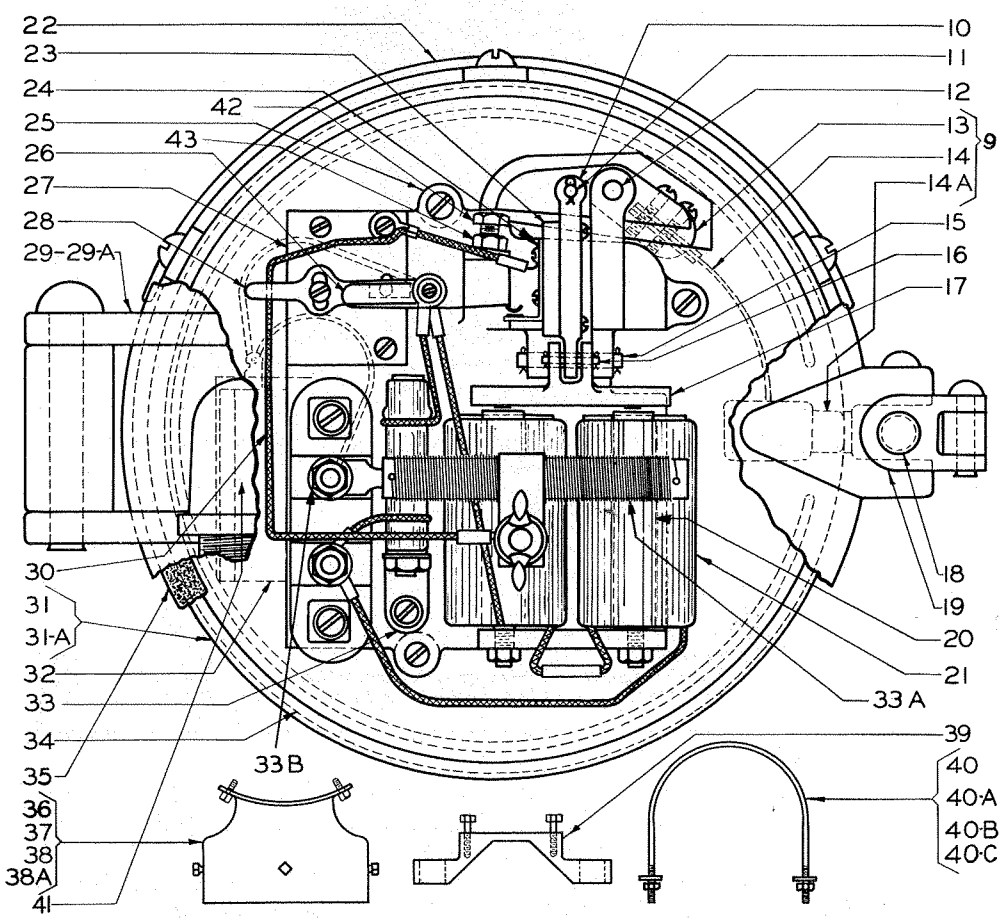

For references and replacement parts list see opposite page.

Type 1275 Pedestrian Crossing Bell

(Continued)

REPLACEMENT PARTS

ORDERING REFERENCE

Specify Plate Number B15, Reference Number, and Description

Ref. No.	Description	Drawing Ref.
1	Type 1275 Pedestrian Crossing Bell for mounting on top of 4″ I. D. pipe post (Specify operating voltage)	1275CR
2	Type 1275 Pedestrian Crossing Bell for mounting on top of 3½″ I. D. pipe post (Specify operating voltage)	1275BR
3	Type 1275 Pedestrian Crossing Bell for mounting on top of 3″ I. D. pipe post (Specify operating voltage)	1275DR
4	Type 1275 Pedestrian Crossing Bell for mounting on top of 5″ I. D. pipe post (Specify operating voltage)	1275FR
5	Type 1275 Pedestrian Crossing Bell for mounting on side of pole (Specify I. D. of pipe post and operating voltage)	1275AR
	Replacement Parts	Piece No.
9	Assembly of oscillator and hammer	1275-3B
10	Operating link	1282
11	Operating link stud	1293
12	Oscillator pin	1294
13	Oscillator complete with bushings and stud	1280-1
14	Hammer complete with bakelite head	1299B
14a	Bakelite head only	1299-5B
15	Link bracket pin	1291
16	Armature pin	1292
17	Armature	1281-1
18	Locking bolt	1410-11
19	Locking hasp and nut	1410-31
20	Magnet core	1296
21	Magnet coil (Specify resistance of bell)	Dwg. 1297-4
22	Rain shield	1284
23	Contact mounting block	1287
24	Moving contact	1288
25	Base plate	1283
26	Contact finger	1289
27	Contact mounting block	1286
28	Contact finger support	1285
29	Door complete (for side of pole mounting)	1276-5
29a	Door complete (for top of pole mounting)	1276-3
30	Flexible wire lead	1288-1
31	Bell case (for top of pole mounting)	1277
31a	Bell case (for side of pole mounting)	1277-1
32	¼ M. F. condenser	1101-87B
33	Non-arcing resistance	1235
33a	Variable resistance unit	1210-28A
33b	Variable resistance unit spacer	1290-5
34	Steel gong	1295
34b	Bell metal gong	1295-B
35	Felt door packing strips	1276-4
36	Case socket for 4″ I. D. pipe w/mounting screws and set screws	1278-3
37	Case socket for 3½″ I. D. pipe w/mounting screws and set screws	1278-4
38	Case socket for 3″ I. D. pipe w/mounting screws and set screws	1278-5
38a	Case socket for 5″ I. D. pipe w/mounting screws and set screws	1278-5A
39	Clamp for mounting bell to side of pole (2 required)	1279-1
40	U-bolt for mounting bell to 4″ I. D. pole (2 required)	1276-11
40a	U-bolt for mounting bell to 3½″ I. D. pole (2 required)	1276-10
40b	U-bolt for mounting bell to 3″ I. D. pole (2 required)	1276-13
40c	U-bolt for mounting bell to 5″ I. D. pole (2 required)	1276-12
41	Wire outlet (used only on 1275A bell)	1222-15
42	#10—24 x ½″ long hex head steel cap screw	
43	#10—24 steel hex nut	

WESTERN RAILROAD SUPPLY COMPANY

Type 1101 Maxatone Highway Crossing Bell

(MANUFACTURE DISCONTINUED)

REPLACEMENT PARTS

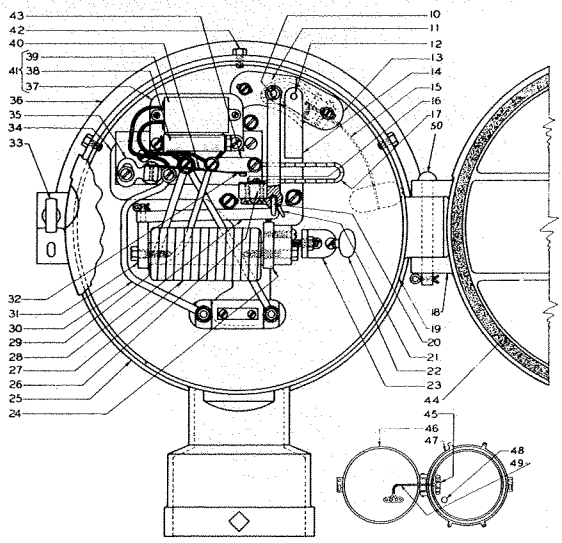

ORDERING REFERENCE

Specify Plate Number B20, Reference Number and Description

Ref. No.	Description	Piece No.
10	Link bearing shaft	1101–13
11	Dust guard	1101–55
12	Hammer bearing shaft	1101–12
13	Hammer bearing	1101–92
14	Mechanism complete	1101–105
15	Hammer complete with reinforcement	1101–9
16	Flat contact	1101–32
17	Flexible lead wire	1101–37
18	Hinged cover for top of post mounting	1101–90
19	Hinged case for top of post mounting	1101–4
20	Armature connecting link	1101–48
21	Operating link	1101–6
22	Adjustment bracket thumb screw	1101–42
23	Angle adjustment bracket	1101–25
24	Assembly of front pole piece	1101–21
25	Steel gong	1211
26	Contact support	1101–27
27	Coil (Specify resistance of bell)	Dg. 1101–23
28	Armature	1101–19
29	Magnet core	1101–22
30	Wire jumper	1101–38
31	Assembly of back pole piece	1101–20
32	Contact finger complete	1101–28
33	Hinged cover thumb screw	1101–43
34	Mechanism frame only	1101–5
35	Contact finger support	1101–8
36	Rain shield	1101–3
37	Mounting plate for condenser and resistance	1101–87
38	Non-arcing resistance	1235
39	Non-arcing condenser (Eliminates radio interference)	1101–86
40	Contact finger reinforcement	1101–30
41	Condenser and resistance assembly complete	1101–88
42	Cap screw (3 required)	
43	Connecting link	1101–35
44	Door packing strip	1101–89
45	Terminal block (For side-mounting bell only)	1056–16
46	Hinged case for side of post mounting (1101–101 Bell only)	1101–94
47	Hinged cover for side of post mounting (1101–101 Bell only)	1101–91
48	Wire outlet for side of post mounting (1101–101 Bell only)	1101–99
49	Flexible wire lead for side of post mounting (1101–101 Bell only)	1101–98
50	Hinge pin with cotter pin	1101–29A

MEMORANDA

WESTERN RAILROAD SUPPLY COMPANY

Type 555 Highway Crossing Bell

MOTOR DRIVEN — GONG TYPE

For 6 to 600 Volts D.C. or 115 or 230 Volts A.C., 25 or 60 cycles

IMPROVED TYPE

Approximately 112 Strokes Per Minute

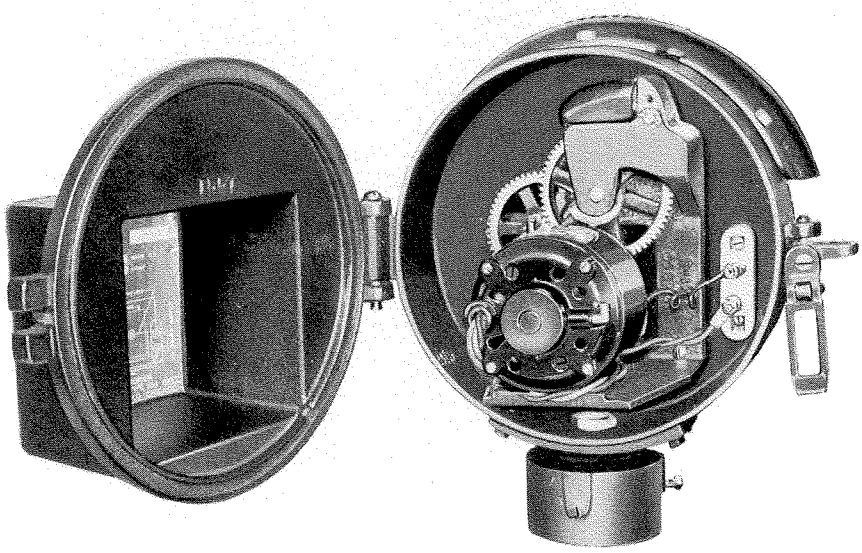

The Type 555 Gong Type Crossing Bell is of the same general appearance as the Type 222 Bell except that the hinged cover is enlarged to house the motor driven mechanism, consisting of a motor, two gears and a bell hammer. A cam mounted on one of the gear wheels engages and raises a weight to a certain point and then, due to gravity, allows it to drop. The bell hammer is connected to this operating weight by a shaft which causes the hammer to strike the gong a sharp heavy blow when the weight drops, giving a clear penetrating sound. The hammer blows are so timed that the sound waves of one blow are not broken up by subsequent waves.

Steel gong is furnished unless bell metal is specified.

This bell can be furnished for operation on any specified direct current voltage from 6 to 600; or for use on alternating current commercial lighting circuits of 115 or 230 volts, either 25 or 60 cycle.

When ordering, specify type of mounting and:
If for Direct Current specify voltage.
If for Alternating Current specify voltage and frequency.

ORDERING REFERENCE

Specify Plate Number B25, Reference Number and Description

Ref. No.	Descriptiou	Drawing Ref.
1	Type 555 Bell for mounting on top of 3½″ I. D. pipe post.....	0555B
2	Type 555 Bell for mounting on top of 4″ I. D. pipe post.....	0555C
3	Type 555 Bell for mounting on top of 3″ I. D. pipe post.....	0555D
4	Type 555 Bell for mounting on top of 5″ I. D. pipe post.....	0555F

Type 555 Bell can be furnished for mounting on the side of pole or flat surface by use of our Gooseneck Bracket (See Plate B60).

WESTERN RAILROAD SUPPLY COMPANY

Type 555 Highway Crossing Bell

(Continued)

REPLACEMENT PARTS FOR IMPROVED TYPE

See Plate B56 for Replacement Parts for Original Design

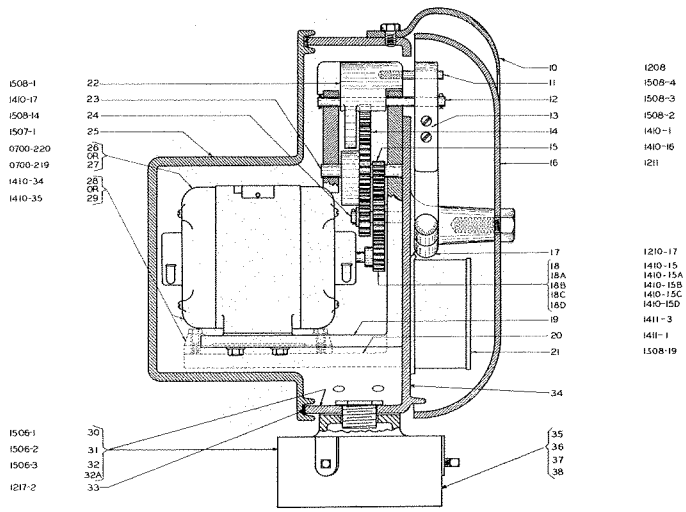

ORDERING REFERENCE

Specify Plate Number B25, Reference Number and Description

Ref. No.	Description	Piece No.	Ref. No.	Description	Piece No.
10	Rain shield	1208	27	D. C. motor (Bells after Serial No. 600) (Specify voltage)	Dwg. 0700-219
11	Operating weight stud	1508-4	28	A. C. motor (Bells before Serial No. 601) (Specify voltage and frequency)	Dwg. 1410-34
12	Operating weight shaft	1508-3	29	D. C. motor (Bells before Serial No. 601) (Specify voltage)	Dwg. 1410-35
13	Hammer support	1508-2	30	Case and socket assembly for mounting on 3½" I. D. pipe	1506-1A
14	Drive gear	1410-1	31	Case and socket assembly for mounting on 4" I. D. pipe	1506-2A
15	Intermediate gear and pinion	1410-16	32	Case and socket assembly for mounting on 3" I. D. pipe	1506-3A
16	Steel gong	1211	32a	Case and socket assembly for mounting on 5" I. D. pipe	1506-4A
16a	Bell metal gong	1211-B	33	Door Packing	1217-2
17	Hammer with reinforcements	1210-17	34	Case for A. C. bell	1506
18	Motor pinion 12 teeth 5/16" bore	1410-15	34a	Case for D. C. bell	1506A
18a	Motor pinion 14 teeth 5/16" bore	1410-15A	35	Socket subassembly for 3" I. D. pipe	1206-3B
18b	Motor pinion 16 teeth 5/16" bore	1410-15B	36	Socket subassembly for 3½" I. D. pipe	1206-2B
18c	Motor pinion 20 teeth 5/16" bore	1410-15C	37	Socket subassembly for 4" I. D. pipe	1206-4B
18d	Motor pinion 14 teeth 3/8" bore	1410-15D	38	Socket subassembly for 5" I. D. pipe	1206-5B
19	Frame (Bells after Serial No. 600)	1411-3			
20	Frame (Bells before Serial No. 601)	1411-1			
21	Capacitor for 110 V. motor	1508-19			
21a	Capacitor for 220 V. motor	1508-19A			
22	Operating weight	1508-1			
23	Drive gear shaft	1410-17			
24	Intermediate gear stud	1508-14			
25	Door complete	1507-1			
26	A. C. motor (Bells after Serial No. 600) (Specify voltage and frequency)	Dwg. 0700-220			

WESTERN RAILROAD SUPPLY COMPANY

Type AL-50 Motor Driven Locomotive Type Bell

16″ LOCOMOTIVE GONG

For 10 or 110 Volts D.C. and 115 or 230 Volts A.C., 25 or 60 cycles

Approximately 32 Strokes Per Minute

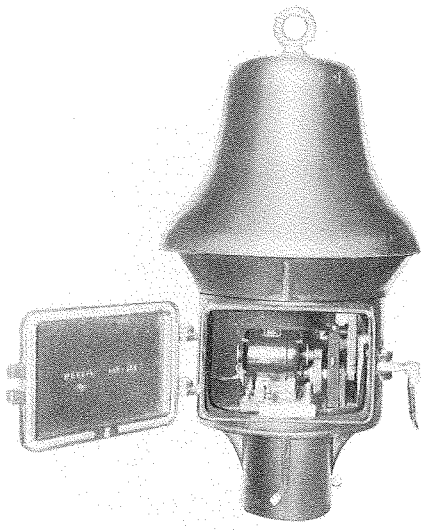

Type AL-50 Motor Driven Locomotive Type Bell is now made with improved 3-piece mechanism housing.

This motor driven locomotive type bell is particularly adapted for use wherever a very penetrating warning is required, such as in industrial areas.

The mechanism is extremely simple and consists of a motor and a train of gears which drive a cam used for raising a weight, which being attached to the clapper, delivers heavy, evenly timed blows on the inside of a 16″ heavy steel or bell metal gong. The motor and gears are mounted on a removable base.

The bell may be equipped to operate on any commercial A.C., voltage and frequency, as well as any standard D.C. voltage.

Steel gong is furnished unless bell metal is specified.

When ordering, specify type of mounting and:
If for Direct Current specify voltage.
If for Alternating Current specify voltage and frequency.

ORDERING REFERENCE

Specify Plate Number B30, Reference Number and Description

Ref. No.	Description	Drawing Ref.
1	Type AL-50 Locomotive Type Bell for mounting on top of 4″ I. D. pipe post (Specify D. C. voltage or A. C. voltage and frequency)	AL-50C
4	Type AL-50 Locomotive Type Bell for mounting on top of 5″ I. D. pipe post (Specify D. C. voltage or A. C. voltage and frequency)	AL-50F

For replacement parts see following page.

NOTE: This bell may be furnished with Gooseneck Bracket for mounting on side of pole or building. See Plate B60.

WESTERN RAILROAD SUPPLY COMPANY

Type AL-50 Motor Driven Locomotive Type Bell

(MADE AFTER JANUARY 1, 1955)

(Continued)

REPLACEMENT PARTS

New style with 3-piece mechanism housing
See Page 22 for oldstyle with one-piece housing

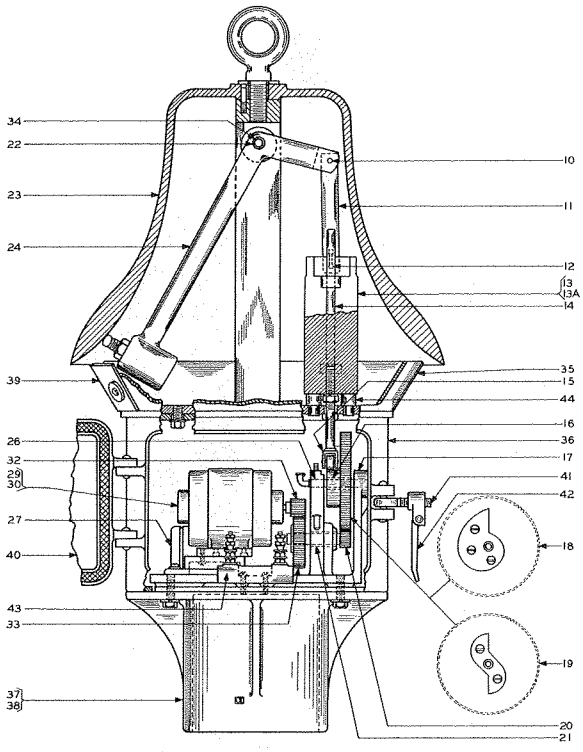

ORDERING REFERENCE

Specify Plate Number B30, Reference Number and Description

Ref. No.	Description	Piece No.	Ref. No.	Description	Piece No.
10	Connecting link pin	0050-18	26	Gear shaft with oil cup	0050-35
11	Connecting link	0050-26	27	Capacitor for 110 V. motor	0700-210
12	Operating weight pin	0050-32	27a	Capacitor for 220 V. motor	0700-210A
13	Operating weight with bumpers (For Bells shipped before April 15, 1957.)	0050-5	29	D. C. motor (Specify voltage)	Dg.0050-28
13a	Operating weight only (For Bells shipped after April 15, 1957)	0050-51A	30	A. C. motor (Bells purchased after 1/1/37) (Specify voltage and frequency)	Dg.0050-29
14	Guide stud	0050-20	32	Motor pinion	0050-25
15	Roller assembly	0050-10	33	Connecting gear	0050-7
16	Bushing	0050-16	34	Clapper pivot pin	990-31
17	Mechanism frame	0050-3	35	Gong Support	990-150A
18	Drive gear and single step cam	0050-33	36	Mechanism housing	990-152A
19	Drive gear and double step cam	0050-34	37	Base socket for 4" pipe post	990-154A
20	Shaft gear	0050-24	38	Base socket for 5" pipe post	990-155A
21	Bushing	0050-15	39	Hand hole cover with screws	990-156B
22	Bushing	990-13	40	Housing cover with packing	990-151B
23	Steel gong	990-11	41	Hasp eye bolt	1410-11
23a	Bell metal gong	990-11B	42	Locking hasp	1410-30
24	Clapper complete	0050-23	43	Terminal Strip	1056-14
			44	Bumper	0050-22

WESTERN RAILROAD SUPPLY COMPANY

Type AL-50 Motor Driven Locomotive Type Bell

(MADE BEFORE JANUARY 1, 1955)

(Continued)

REPLACEMENT PARTS

Old style with one-piece mechanism housing
See Page 21 for new style 3-piece housing

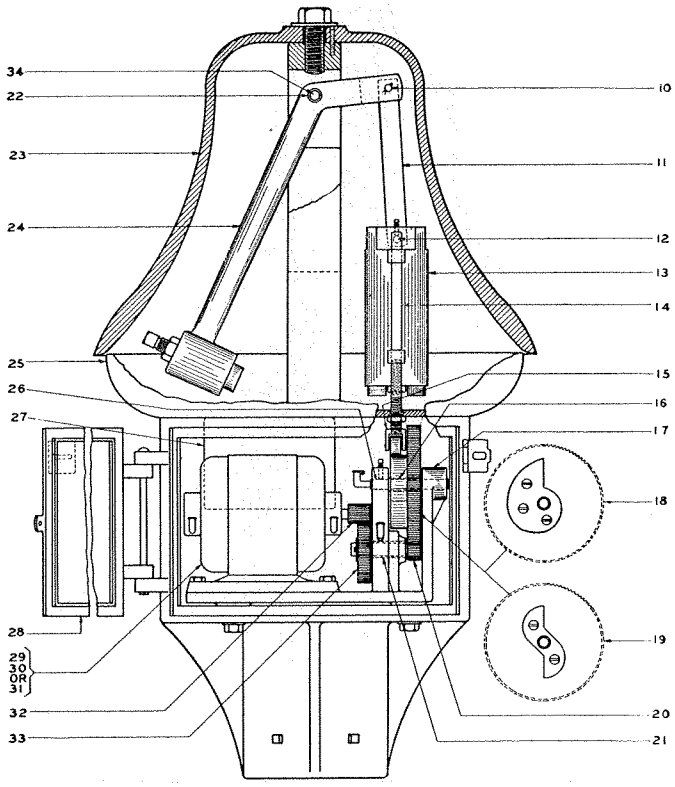

ORDERING REFERENCE

Specify Plate Number B30, Reference Number and Description

Ref. No.	Description	Piece No.	Ref. No.	Description	Piece No.
10	Connecting link pin	0050-18	24	Clapper complete	0050-23
11	Connecting link	0050-26	25	Mechanism case	0050-1
12	Operating weight pin	0050-32	26	Gear shaft with oil cup	0050-35
13	Operating weight with bumpers	0050-5	27	Capacitor for 110 V. motor	0700-210
14	Guide stud	0050-20	27a	Capacitor for 220 V. motor	0700-210A
15	Roller assembly	0050-10	28	Mechanism case door	0050-36
16	Bushing	0050-16	29	D. C. motor (Specify voltage)	Dg. 0050-28
17	Mechanism frame	0050-3	30	A. C. motor (Bells purchased after 1/1/37) (Specify voltage and frequency)	Dg. 0050-29
18	Drive gear and single step cam	0050-33			
19	Drive gear and double step cam	0050-34			
20	Shaft gear	0050-24	31	A. C. motor (Bells purchased before 1/1/37) (Specify voltage and frequency)	Dg. 0050-30
21	Bushing	0050-15			
22	Bushing	990-13			
23	Gong (Specify cast steel or bell metal)	Dg. 990-11	32	Motor pinion	0050-25
			33	Connecting gear	0050-7
			34	Clapper pivot pin	990-31

WESTERN RAILROAD SUPPLY COMPANY

Type 444 Locomotive Type Bell

(MANUFACTURE DISCONTINUED)

REPLACEMENT PARTS FOR IMPROVED TYPE

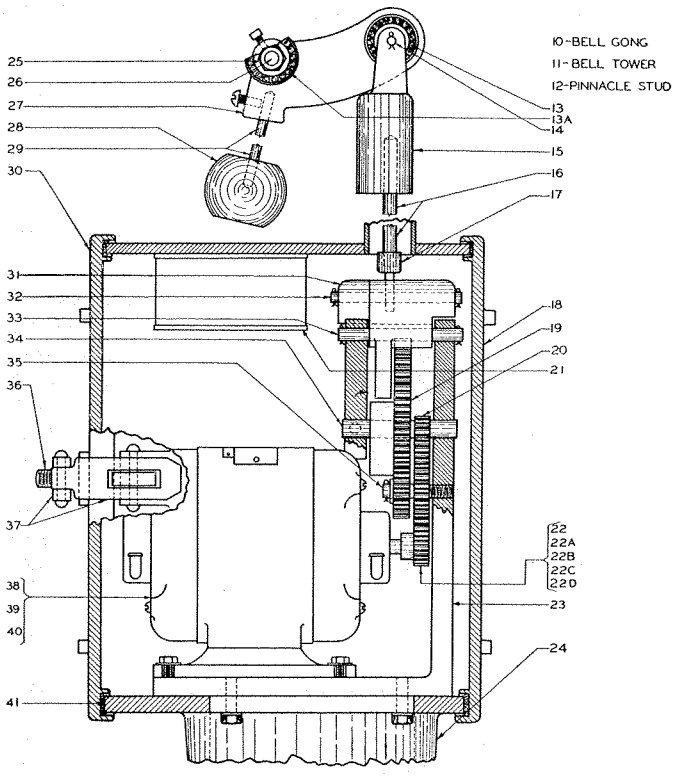

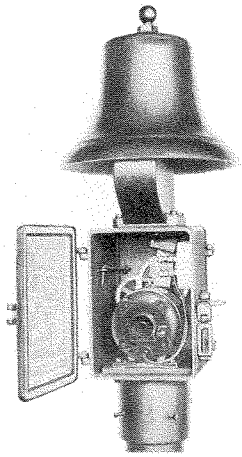

ORDERING REFERENCE

Specify Plate Number B35, Reference Number and Description

Ref. No.	Description	Piece No.	Ref. No.	Description	Piece No.
10	Bell gong	1409-1	**25**	Thin hexagon nut	1410-51
11	Bell tower	1408-1	**26**	Hammer crank shaft	1410-6
12	Pinnacle stud	1409-4	**27**	Hammer crank	1408-2
13	Ball bearing (1/4" I. D.)	1410-53	**28**	Hammer ball	1407-3
13a	Ball bearing (3/16" I. D.)	1410-52	**29**	Hammer rod	1407-4
14	Counterweighted jaw pin	1410-8	**30**	Front door complete	1407-5
15	Counterweighted jaw	1408-3	**31**	Operating weight	1409-5
16	Up-and-down rod	1410-5	**32**	Shaft for up-and-down rod lug	1410-10
17	Up-and-down rod lug	1410-9	**33**	Operating weight shaft	1410-7
18	Back door complete	1407-6	**34**	Drive gear shaft	1410-17
19	Drive gear	1410-1	**35**	Intermediate gear stud	1508-14
20	Intermediate gear and pinion	1410-16	**36**	Locking eyebolt	1410-11
21	Capacitor for 110 V. motor	0700-210	**37**	Locking nut and hasp	1410-31
21a	Capacitor for 220 V. motor	0700-210A	**38**	A. C. motor (Bells before Serial No. 331) (Specify voltage and frequency)	Dg.1410-38
22	Motor pinion 12 teeth 5/16" bore	1410-15			
22a	Motor pinion 14 teeth 5/16" bore	1410-15A			
22b	Motor pinion 16 teeth 5/16" bore	1410-15B	**39**	A. C. motor (Bells after Serial No. 330) (Specify voltage and frequency)	Dg.1410-37
22c	Motor pinion 20 teeth 5/16" bore	1410-15C			
22d	Motor pinion 14 teeth 3/8" bore	1410-15D			
23	Mechanism frame	1411-1	**40**	D. C. motor (Specify voltage)	Dg.1410-35
24	Bell case	1406	**41**	Door packing strip	1407-7

NOTE: For replacement parts for old style bell with small motor see Plate B56.

WESTERN RAILROAD SUPPLY COMPANY

Type 990 Locomotive Type Bell

16″ LOCOMOTIVE GONG

For Use on 4.5 to 12 volts D.C.

Approximately 52 Strokes Per Minute

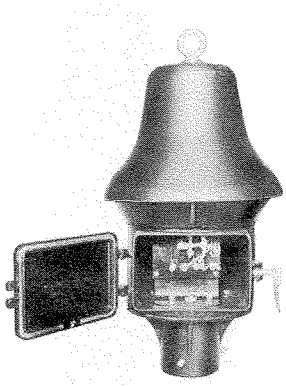

Type 990 Locomotive Type Bell is now made with improved 3-piece mechanism housing.

The movement consists of a solenoid electromagnet, operating contacts and a switching device which are contained in separate water-tight compartments. The armature of the solenoid magnet operates a single pole switch which makes and breaks the circuit quickly without loss of power. When the circuit is closed, the armature is attracted and the snap switch, actuated by the rocker arm, breaks the circuit just as the heavy hammer strikes a powerful blow on the inside of the gong. As the circuit is broken, the armature and hammer return by gravity to normal position.

Type 990 bell is furnished with a solenoid coil of correct resistance value for operating voltage which must be specified. Four standard voltages are listed below. Two socket sizes are available to accommodate 4″ and 5″ pipe posts. Specify post diameter.

ORDERING REFERENCE

Specify Plate Number B40, Reference Number and Description

Ref. No.	Description	Dwg. Ref.
1	Type 990 Locomotive Type Bell complete, for 4.5 Volt D. C. operation and for mounting on top of 4″ pipe post	990C–5
2	Type 990 Locomotive Type Bell complete, for 6 Volt D. C. operation and for mounting on top of 4″ pipe post	990C–6
3	Type 990 Locomotive Type Bell complete, for 8 Volt D. C. operation and for mounting on top of 4″ pipe post	990C–8
4	Type 990 Locomotive Type Bell complete, for 10–12 Volt D. C. operation and for mounting on top of 4″ pipe post	990C–10
5	Type 990 Locomotive Type Bell complete, for 4.5 Volt D. C. operation and for mounting on top of 5″ pipe post	990F–5
6	Type 990 Locomotive Type Bell complete, for 6 Volt D. C. operation and for mounting on top of 5″ pipe post	990F–6
7	Type 990 Locomotive Type Bell complete, for 8 Volt D. C. operation and for mounting on top of 5″ pipe post	990F–8
8	Type 990 Locomotive Type Bell complete, for 10–12 Volt D. C. operation and for mounting on top of 5″ pipe post	990F–10

WESTERN RAILROAD SUPPLY COMPANY

Type 990 Locomotive Type Bell

(MADE AFTER JANUARY 1, 1957)

(Continued)

REPLACEMENT PARTS

New style with 3-piece mechanism housing.

See Page 26 for old style with one-piece housing.

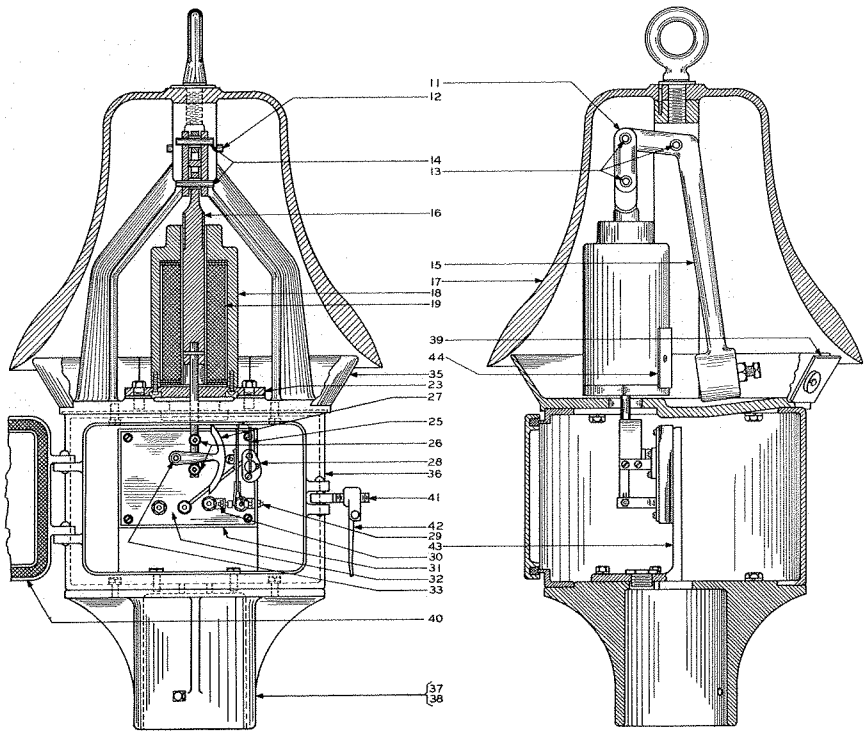

ORDERING REFERENCE

Specify Plate Number B40, Reference Number, and Description

Ref. No.	Description	Piece No.	Ref. No.	Description	Piece No.
11	Armature connecting link	990-8	28	Adjustment stud	990-25
12	Clapper pivot pin	990-31	29	Flasher contact post	990-22
13	Clapper bushing	990-13	30	Magnet contact post	990-21
14	Connecting link pin	990-33	31	Slate base drilled and enameled	990-28
15	Bell clapper complete	990-9A	32	Slate base mechanism complete	990-100
16	Armature complete	990-121	33	Circuit breaker pivot	990-301
17	Steel Gong	990-11	35	Gong Support	990-150B
17a	Bell metal gong	990-11B	36	Mechanism housing	990-152A
18	Magnet shell	990-51	37	Base socket for 4" pipe post	990-154B
19a	Magnet Spool Complete 4.5 V	990-29-5	38	Base socket for 5" pipe post	990-155B
19b	Magnet Spool Complete 6 V	990-29-6	39	Hand hole cover with screws	990-156B
19c	Magnet Spool Complete 8 V	990-29-8	40	Housing cover with packing	990-151B
19d	Magnet Spool Complete 10-12 V	990-29-10	41	Hasp eye bolt	1410-11
23	Magnet shell base with bolts	990-61	42	Locking hasp	1410-31
25	Contact spring complete	990-26	43	Mechanism mounting angle	990-158
26	Switch operating stud	990-19	44	Rubber bumper	990-52
27	Circuit breaker arm complete	990-101			

WESTERN RAILROAD SUPPLY COMPANY

Type 990 Locomotive Type Bell

(MADE BEFORE JANUARY 1, 1955)

(Continued)

REPLACEMENT PARTS

Old style with one-piece mechanism housing

See Page 25 for new style 3-piece housing.

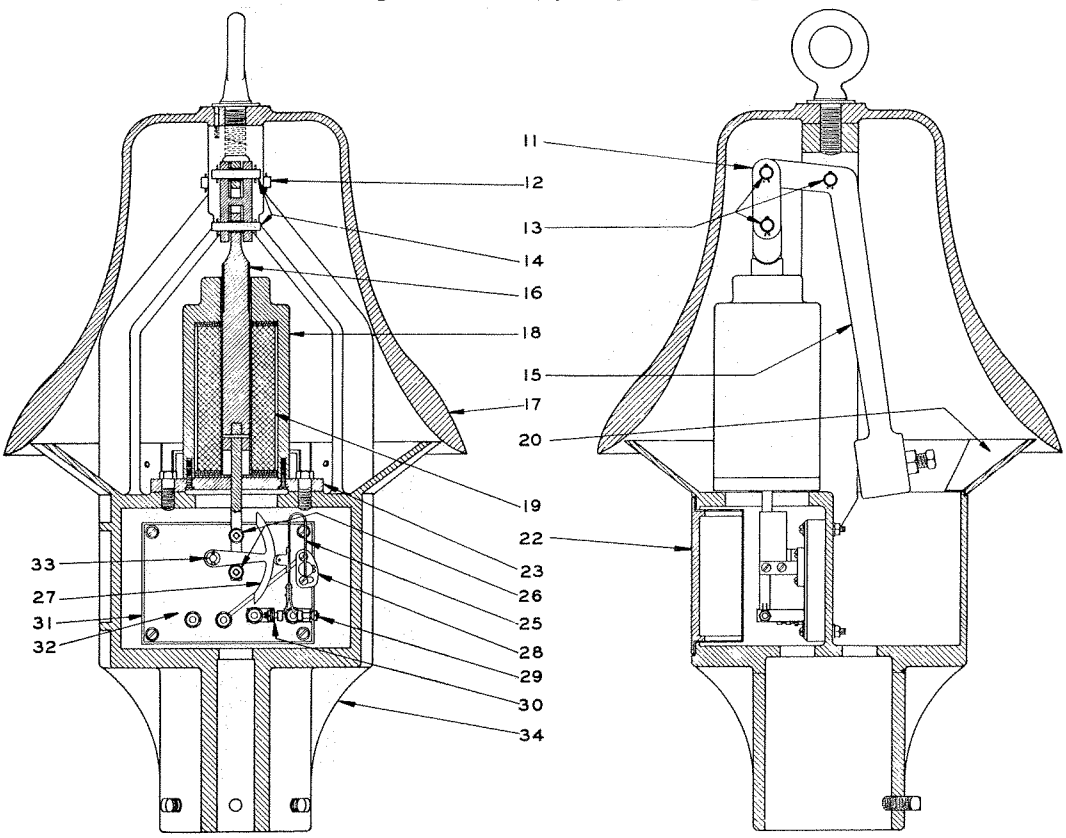

ORDERING REFERENCE

Specify Plate Number B40, Reference Number, and Description

Ref. No.	Description	Piece No.	Ref. No.	Description	Piece No.
11	Armature connecting link	990-8	23	Magnet shell base with bolts	990-61
12	Clapper pivot pin	990-31	25	Contact spring complete	990-26
13	Clapper bushing	990-13	26	Switch operating stud	990-19
14	Connecting link pin	990-33	27	Circuit breaker arm complete	990-101
15	Bell clapper complete	990-9A	28	Adjustment stud	990-25
16	Armature complete	990-121	29	Flasher contact post	990-22
17	Gong (Specify Bell Metal or Cast Steel)	Dg. 990-11	30	Magnet contact post	990-21
18	Magnet shell	990-51	31	Slate base drilled and enameled	990-28
19	Magnet spool complete	990-29	32	Slate base mechanism complete	990-100
20	Hand hole cover with bolts	990-41	33	Circuit breaker pivot	990-301
22	Door for mechanism case	990-2A	34	Mechanism case only	990-1

WESTERN RAILROAD SUPPLY COMPANY

Type 1220 Highway Crossing Bell

(MANUFACTURE DISCONTINUED)

REPLACEMENT PARTS

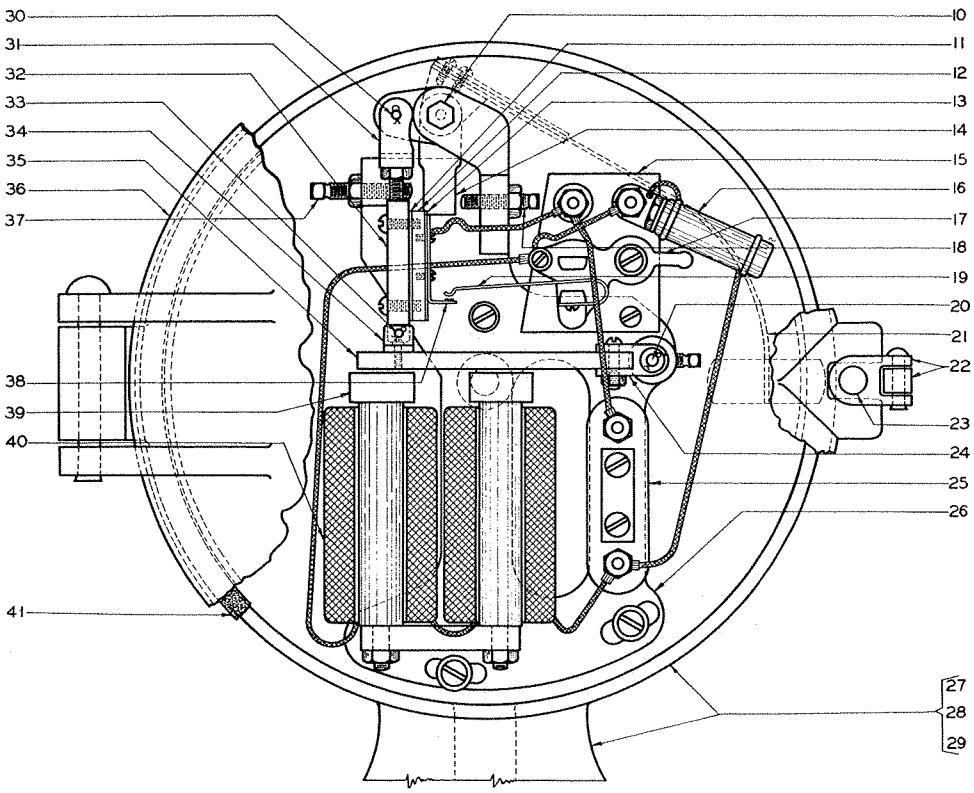

ORDERING REFERENCE

Specify Plate Number B45, Reference Number and Description

Ref. No.	Description	Piece No.	Ref. No.	Description	Piece No.
10	Trunion screw	1222-1	27	Bell case for 3½″ pipe post	1216-4
11	Insulation strip	1222-4	28	Bell case for 4″ pipe post	1216-5
12	Insulation block	1222-2	29	Bell case for 3″ pipe post	1216-6
13	Insulation strip	1222-3	30	Jaw pin	1221-8
14	Oscillator	1221-7	31	Screw jaw	1221-2
15	Terminal plate	1222-6	32	Vertical link	1221-3
16	Non-arcing resistance	1222-9	33	Link bracket pin	1221-9
17	Contact finger support	1209-11	34	Link bracket	1221-4
18	Stop screw with nut		35	Armature	1221-5
19	Contact finger	1222-10	36	Bell case cover	1217-1
20	Armature pin	1222-5	37	Stop screw with nut	
21	Hammer with reinforcements	1222-7	38	Moving contact	1210-5
22	Locking nut and hasp	1410-31	39	Magnet core	1221-6
23	Locking eye bolt	1410-11	40	Magnet coil (5 ohms resistance for 10 ohm 6-8 volt bell unless otherwise specified)	1222-8
24	Armature bearing	1221-10			
25	Porcelain terminal	10565-14			
26	Mechanism base	1221-1	41	Gray felt door packing strip	1217-2

See Plate B5, for additional parts not shown.

Style "A" "AA" and "D" Highway Crossing Bells

MANUFACTURE DISCONTINUED

CONTACT REPLACEMENT PARTS

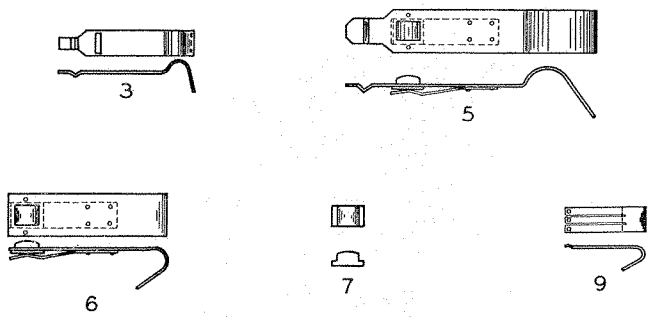

Shown above are replacement parts comprising contacts and springs. All other parts have been discontinued and are no longer available.

For convenience the Reference Numbers appearing on older issues of this catalog are cross-referenced with the Description and Piece Numbers in the table below. Specify type of Bell when ordering these parts.

ORDERING REFERENCE

Specify Plate Number B50, Reference Number and Description

Shown Above Ref. No.	Ref. No.	Description	Piece No.
"A" or "A-A"	**"D"**		
3	**12**	Coin silver front Contact spring	A–66
5	**24**	Contact complete with coplite Contact block	A–6–C
6	**22**	Contact complete with coplite Contact block	A–7–C
7	**23**	Contact block only, for A–6–C and A–7–C Contact	A–666–D
9	**9**	Coin silver back Contact spring	A–77

Highway Crossing Bell Nos. 444 and 555

OLD TYPES WITH SMALL MOTOR
(MANUFACTURE DISCONTINUED)

REPLACEMENT PARTS

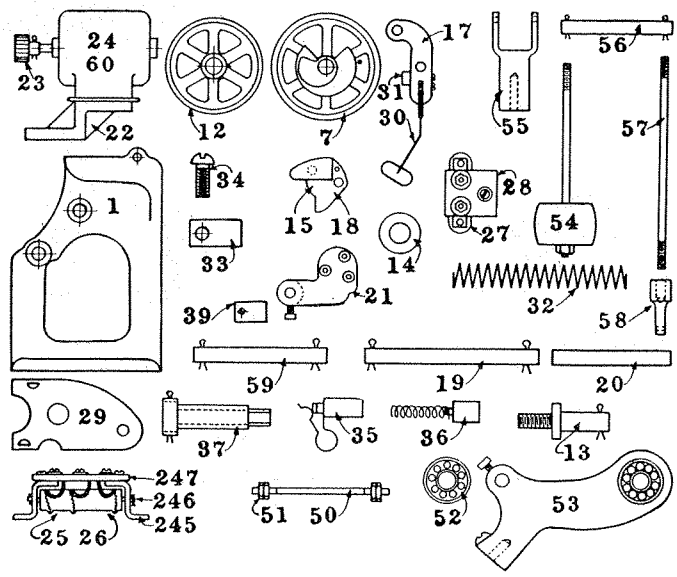

ORDERING REFERENCE
Specify Plate Number B56, Reference Number and Description

Ref. No.	Description	Ref. No.	Description
	Parts Common to both No. 444 and No. 555 Bells		
1	Movement frame.	25	Right hand voltage control resistance.
7	Drive gear and cam complete.	26	Left hand speed control resistance.
12	Intermediate gear and pinion.	27	Porcelain terminal.
13	Stud for intermediate gear.	28	Fibre terminal plate.
14	Washer for intermediate gear.	35	Brush connection clip for A. C. motor.
15	Operating weight for No. 444 bell.	36	Motor brush and tension spring.
18	Operating weight for No. 555 bell.	37	Brush holder sleeve.
19	Shaft for operating weight.	39	Brush tension plug for D. C. motor.
20	Drive gear shaft.	60	6-8 volt D. C. motor.
21	Drive gear shaft support.	245	Resistance unit support.
22	Motor bracket.	246	Resistance unit support shaft.
23	Motor pinion.	247	Resistance unit terminal plate.
24	110 volt A. C. motor (specify frequency).		
	Parts for No. 444 Bell Only		
50	Hammer crank shaft.	55	Counter weight jaw.
51	Hexagon nut for hammer crank shaft.	56	Shaft for counter weight jaw.
52	Ball bearing for hammer crank shaft.	57	Up-and-down rod.
53	Hammer crank with ball bearing.	58	Up-and-down rod lug.
54	Hammer, complete as shown.	59	Shaft for up-and-down rod lug.
	Parts for No. 555 Bell Only		
17	Hammer support.	32	Spring.
29	Dust shield.	33	Spring rocker plug.
30	Hammer and reinforcements only.	34	Supporting screw for rocker plug.
31	Spring plug (hammer end).		

Mounting Fittings for Highway Crossing Bells

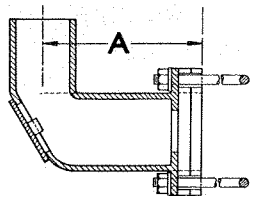

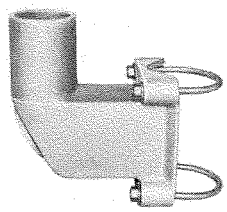

Type 873
Gooseneck Bracket

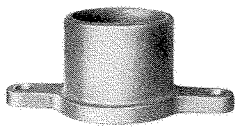

Adaptor for Mounting
Bells on Flat Surfaces

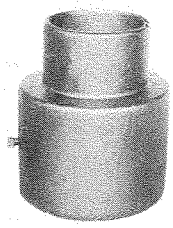

Reducer
5″ to 4″ I.D. Pipe

ORDERING REFERENCE

Specify Plate Number B60, Reference Number, and Description

Ref. No.	Description	Piece No.
1A	Type 873 Gooseneck Bracket Complete for 4″ I.D. Pipe Mounting. Dimension "A"—8⅝″. (See Note 1)	873-29A
1B	Type 873 Gooseneck Bracket Complete for 4″ I.D. Pipe Mounting. Dimension "A"—11⅛″. (See Note 1)	873-29B
2A	Type 873 Gooseneck Bracket Complete for 3½″ I.D. Pipe Mounting. Dimension "A"—8⅝″. (See Note 1)	873-28A
2B	Type 873 Gooseneck Bracket Complete for 3½″ I.D. Pipe Mounting. Dimension "A"—11⅛″. (See Note 1)	873-28B
3A	Type 873 Gooseneck Bracket Complete for 5″ I.D. Pipe Mounting. Dimension "A"—8⅝″. (See Note 1)	873-30A
3B	Type 873 Gooseneck Bracket Complete for 5″ I.D. Pipe Mounting. Dimension "A"—11⅛″. (See Note 1)	873-30B
4A	Type 873 Gooseneck Bracket Complete for 3″ I.D. Pipe Mounting. Dimension "A"—8⅝″. (See Note 1)	873-27A
4B	Type 873 Gooseneck Bracket Complete for 3″ I.D. Pipe Mounting. Dimension "A"—11⅛″. (See Note 1)	873-27B
5A	Type 873 Gooseneck Bracket Complete for 6″ I.D. Pipe Mounting. Dimension "A"—8⅝″. (See Note 1)	873-31A
5B	Type 873 Gooseneck Bracket Complete for 6″ I.D. Pipe Mounting. Dimension "A"—11⅛″. (See Note 1)	873-31B
6A	Type 873 Gooseneck Bracket Complete for 8″ I.D. Pipe Mounting. Dimension "A"—8⅝″. (See Note 1)	873-32A
6B	Type 873 Gooseneck Bracket Complete for 8″ I.D. Pipe Mounting. Dimension "A"—11⅛″. (See Note 1)	873-32B
9	Reducer for 5″ to 4″ I.D. Pipe	990-63
10	Adaptor for Mounting Bell with Socket for 4″ I.D. Pipe on Top of any Flat Surface	216-2
11	Adaptor for Mounting Bell with Socket for 3″ I.D. Pipe on Top of any Flat Surface	216-3

NOTE 1: Gooseneck Brackets are furnished for bell sockets 4½″ I.D.
Gooseneck Brackets may be used with bolts or lag screws to mount bells on the side of buildings or other vertical surfaces.

W
RRS